# M38 - B0886 402 PCS

The Rescue
R-01

(1-7)

(8-12)

(13-22)

(23-29)

(30-35)

(36-45)

**COLOUR**

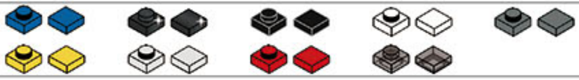

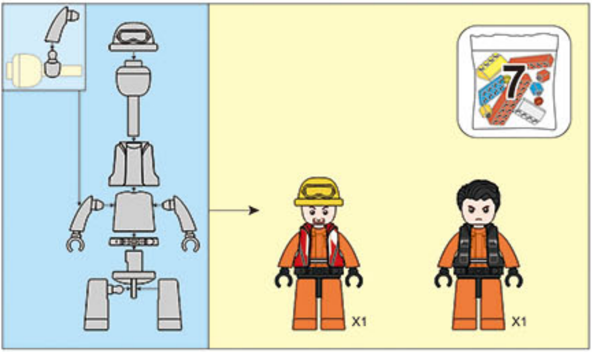

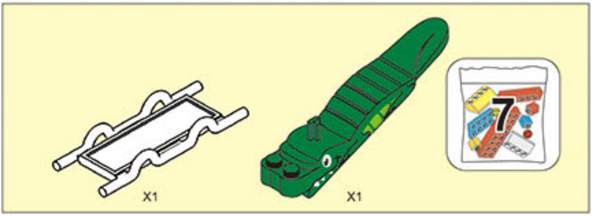

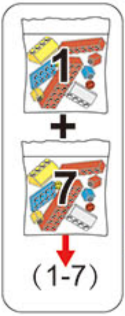

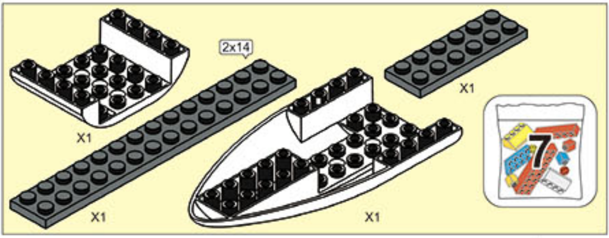
2x14
X1
X1
X1
X1
7

1

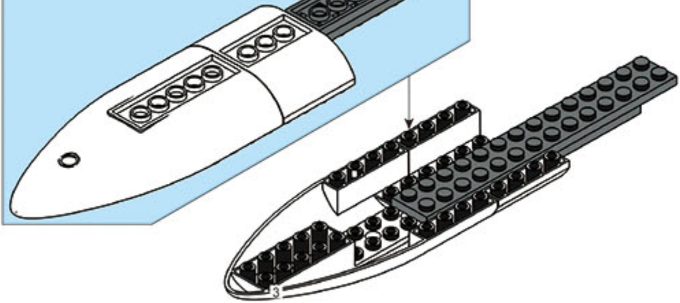

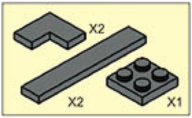

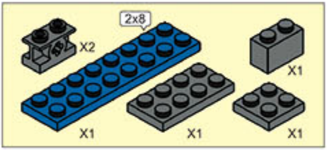
2x8
X2
X1
X1
X1
X1

2

3

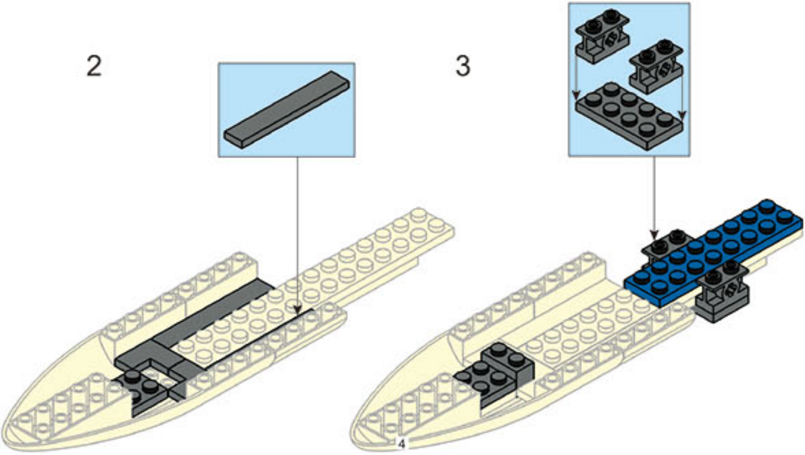

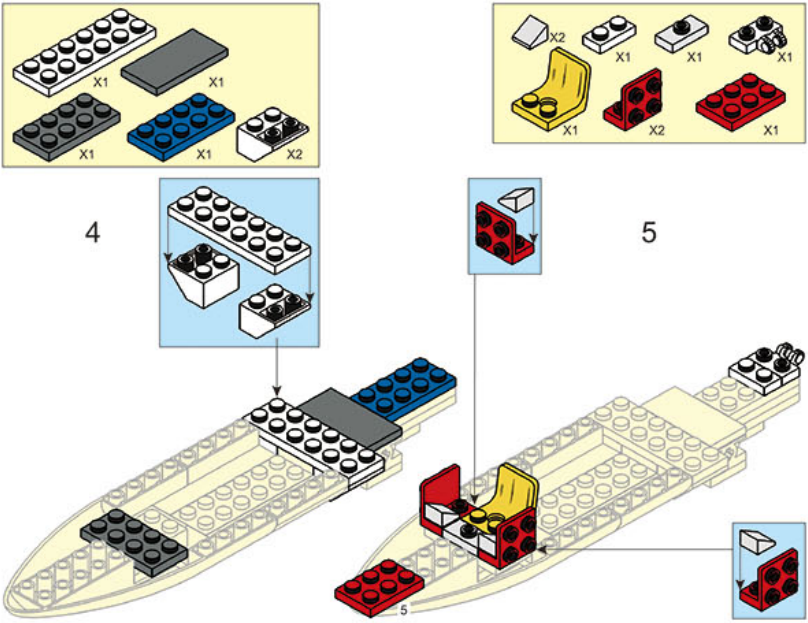
X1
X1
X1
X1
X2
4
X2
X1
X1
X1
X1
X2
X1
5
5

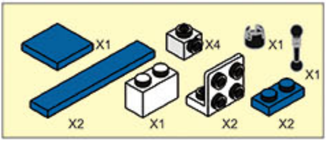
X1
X4
X1
X1
X2
X1
X2
X2

6

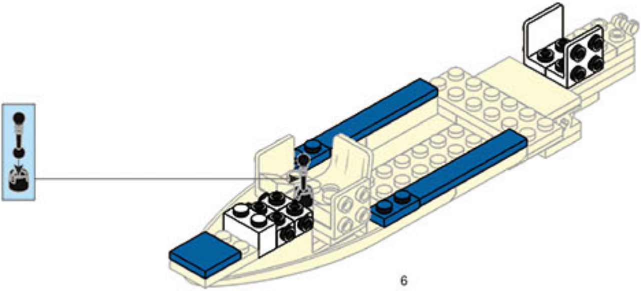

6

## 7

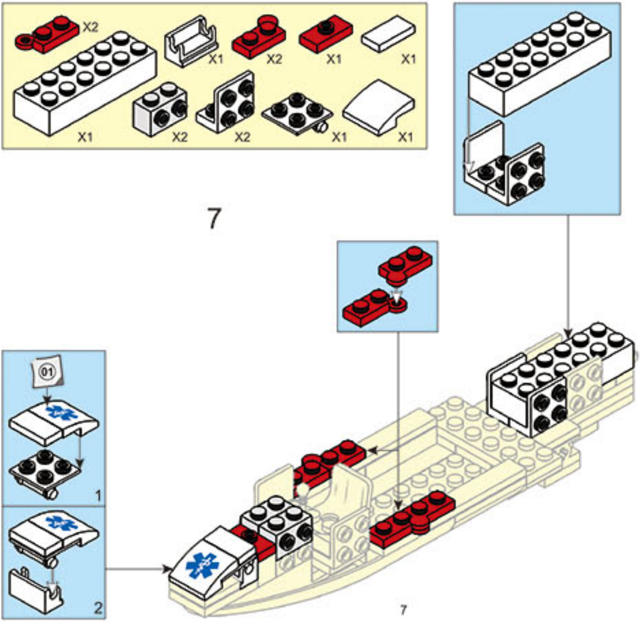
X2
X1
X2
X1
X1
X1
X2
X2
X1
X1
01
1
2

7

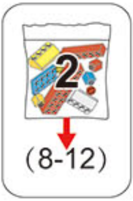

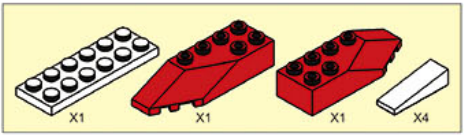

## 8

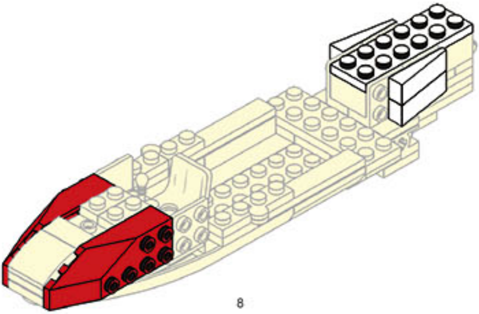

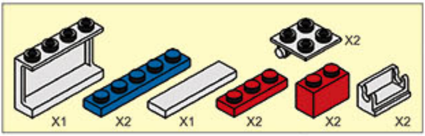
X2
X1
X2
X1
X2
X2
X2

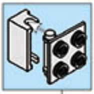

## 9

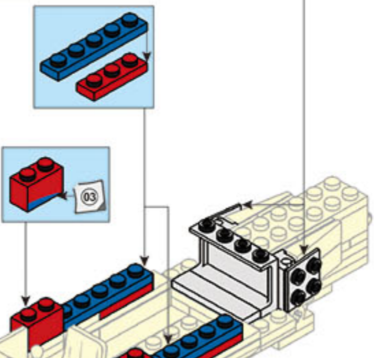

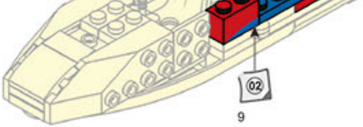

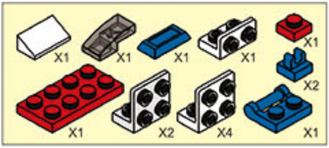
X1
X1
X1
X1
X1
X2
X1
X2
X4
X1

## 10

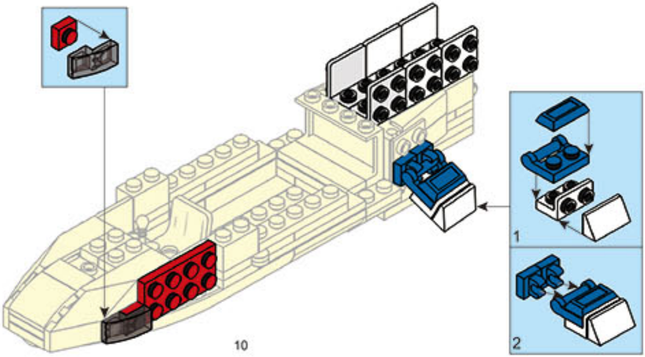

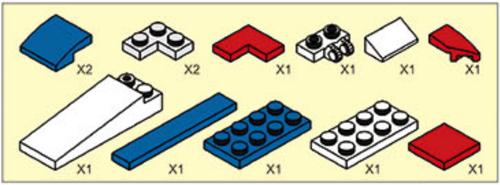
X2
X2
X1
X1
X1
X1
X1
X1
X1
X1
X1

## 11

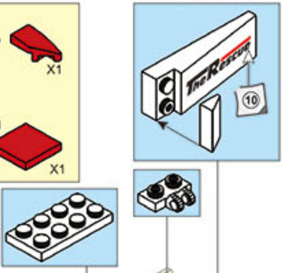
TheRescue
10

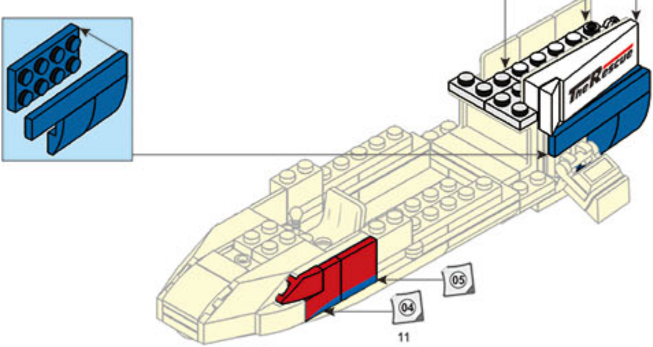
The Rescue
05
04

11

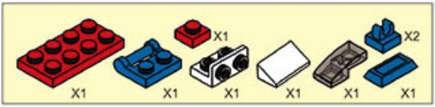
X1
X1
X1
X1
X1
X1
X2
X1
X1

## 12

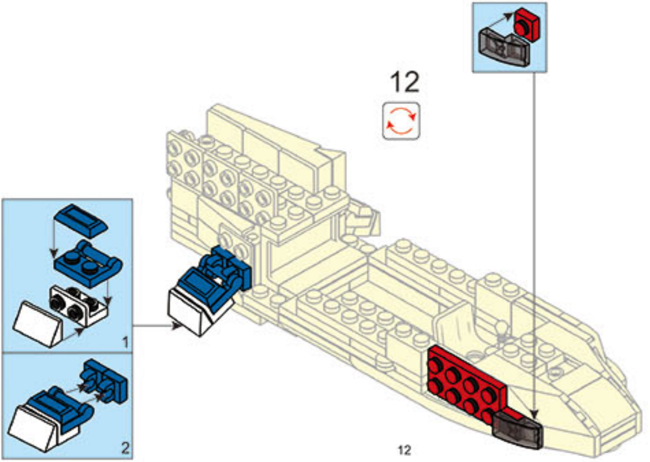

12

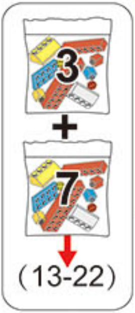

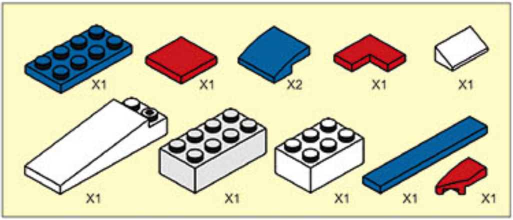
X1
X1
X2
X1
X1
X1
X1
X1
X1
X1

13

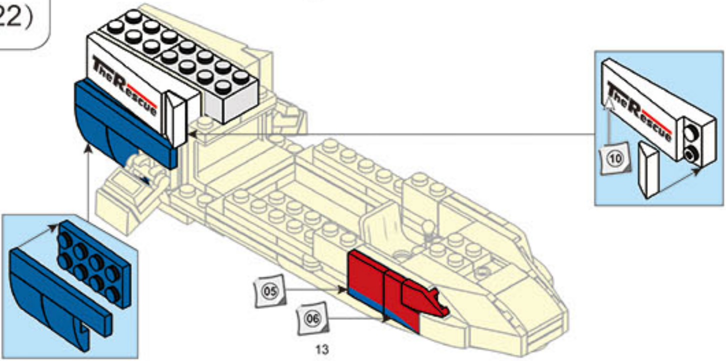
The Rescue
10
05
06
13

---

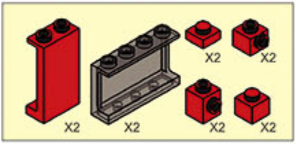
X2
X2
X2
X2
X2
X2

14

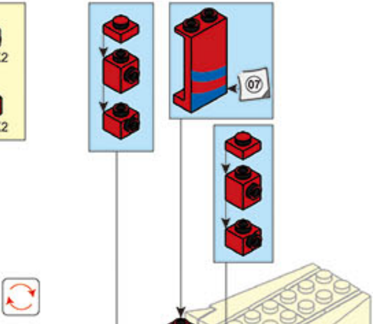

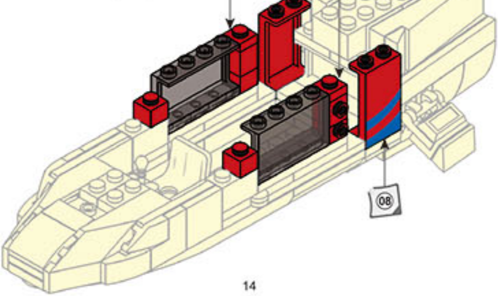

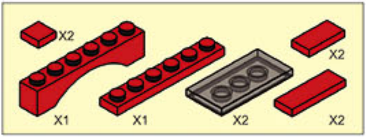
X2
X1
X1
X2
X2
X2

15

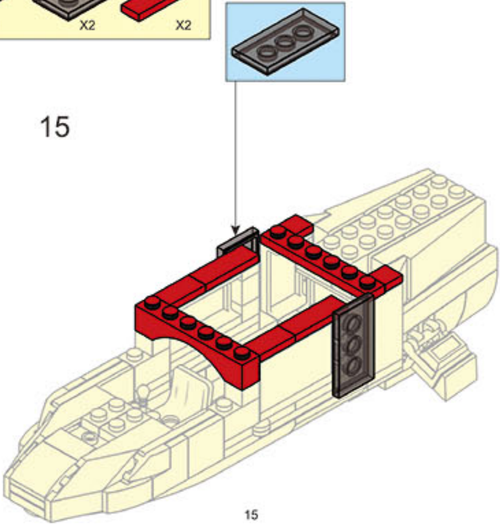

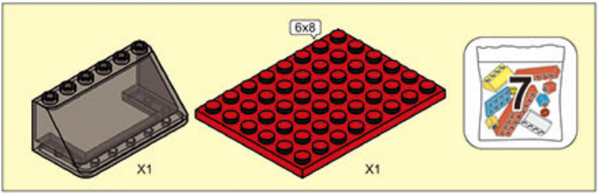

16

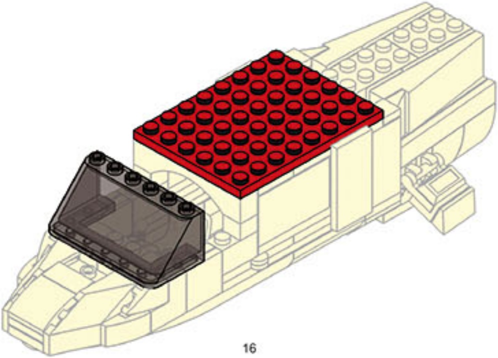

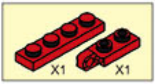

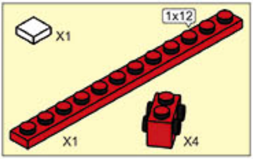
X1
1x12
X1
X4

17

18

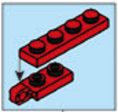

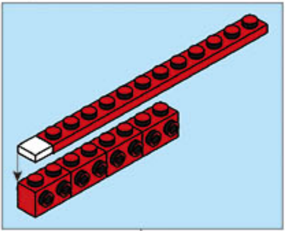

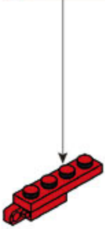

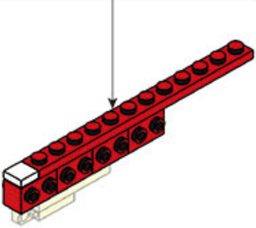

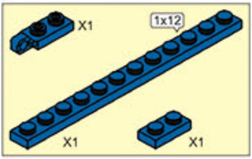
X1
1x12
X1
X1

## 19

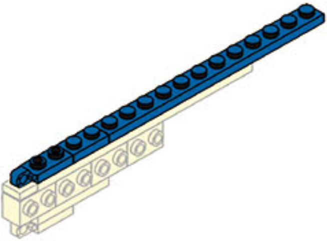

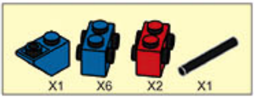

## 20

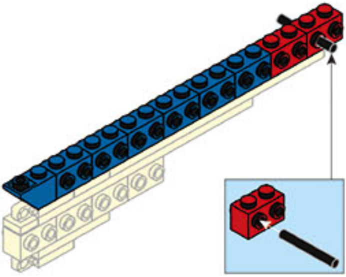

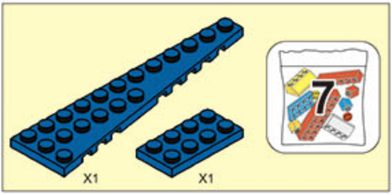

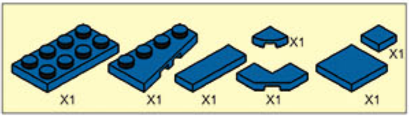
X1
X1
X1
X1
X1
X1
X1

## 21

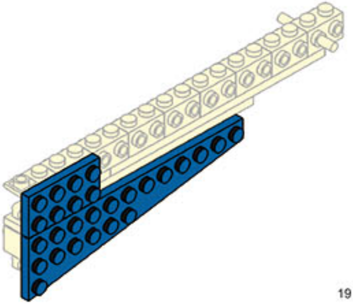

## 22

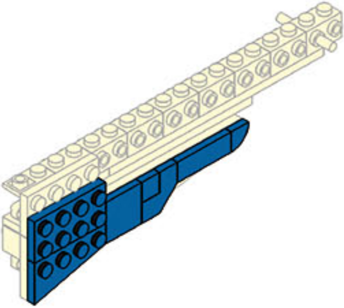

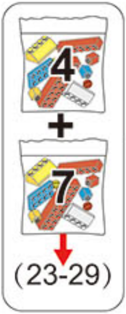

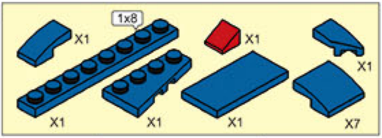
X1
1x8
X1
X1
X1
X1
X1
X1
X7

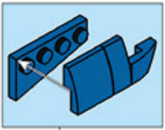

## 23

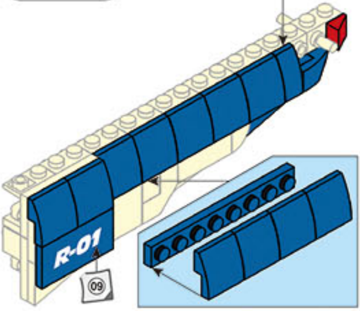

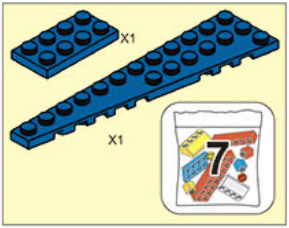

## 24

🔄

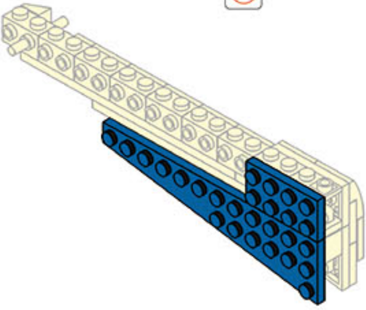

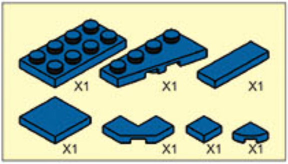
X1
X1
X1
X1
X1
X1
X1

25

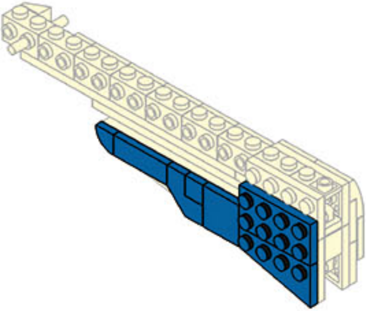

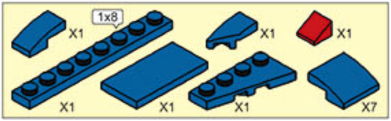
X1
1x8
X1
X1
X1
X1
X1
X7

26

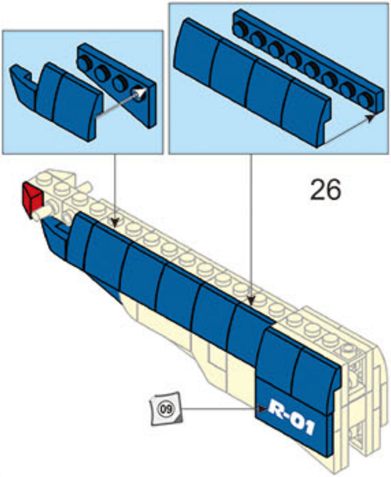

27

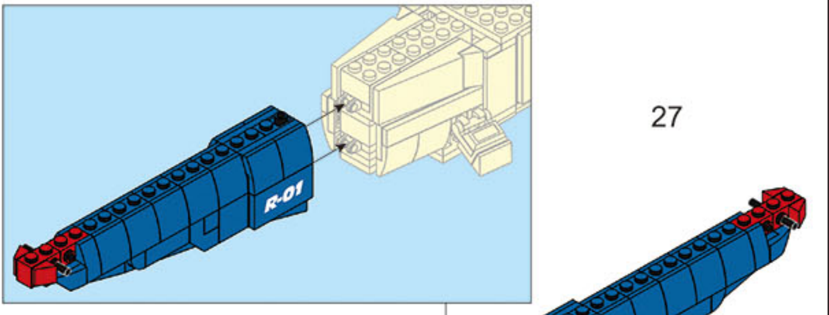

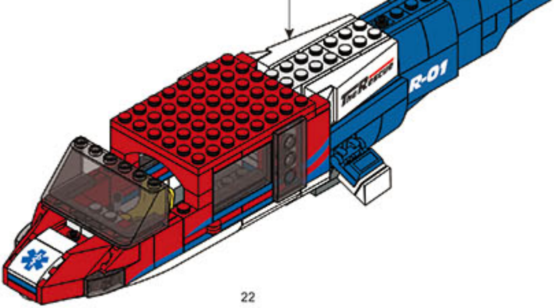

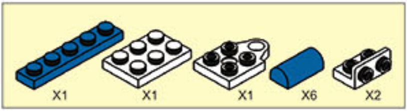
X1
X1
X1
X6
X2

## 28

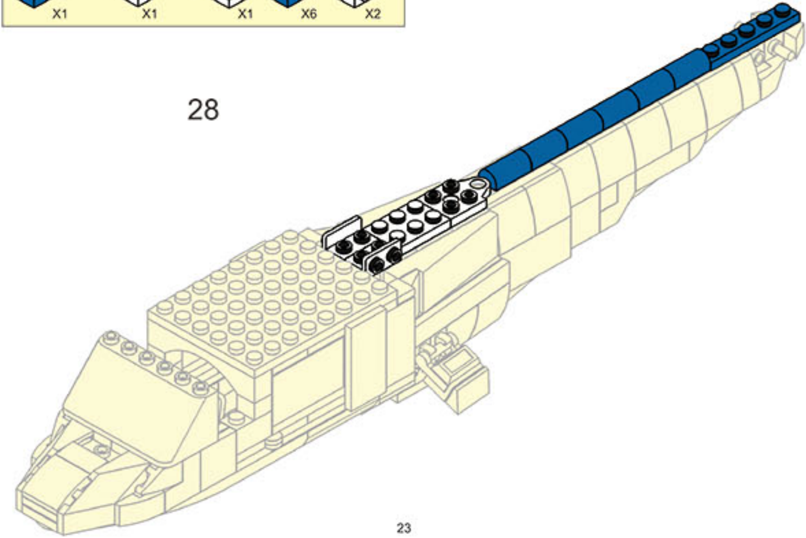

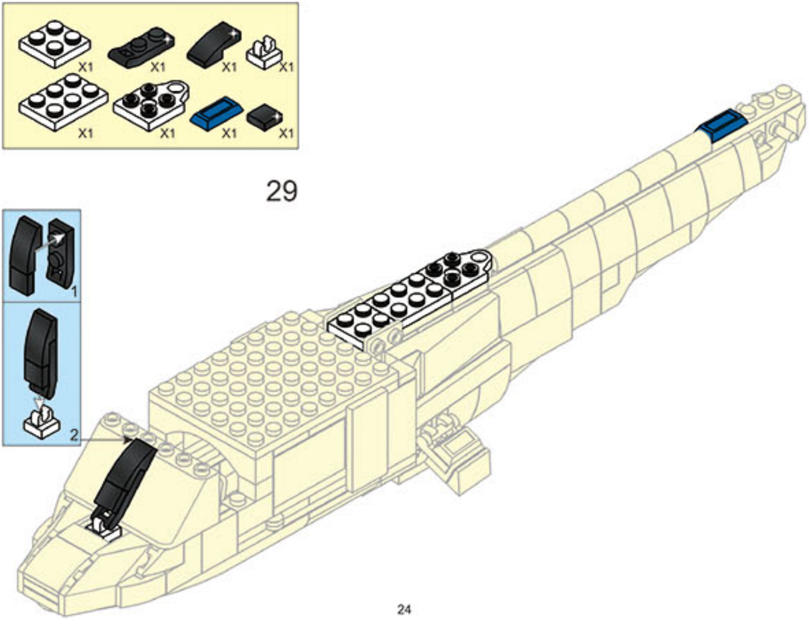
X1
X1
X1
X1
X1
X1
X1
X1
29
1
2

---

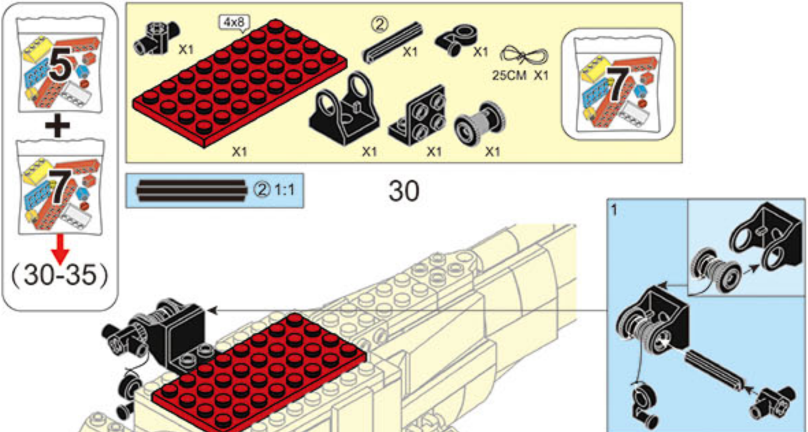
5
+
7
(30-35)
4x8
②
X1
X1
X1
25CM X1
X1
X1
X1
X1
7
② 1:1
30
1

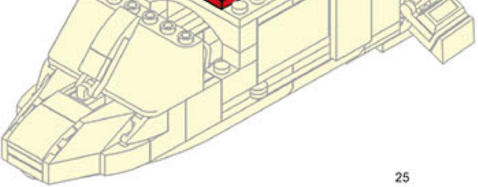

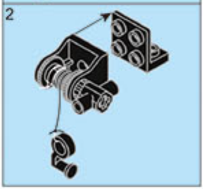

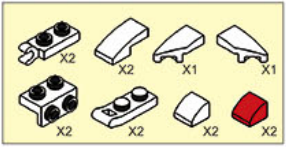
X2
X2
X1
X1
X2
X2
X2
X2

31

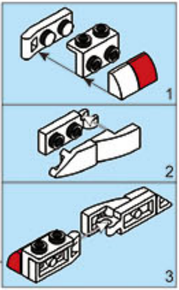

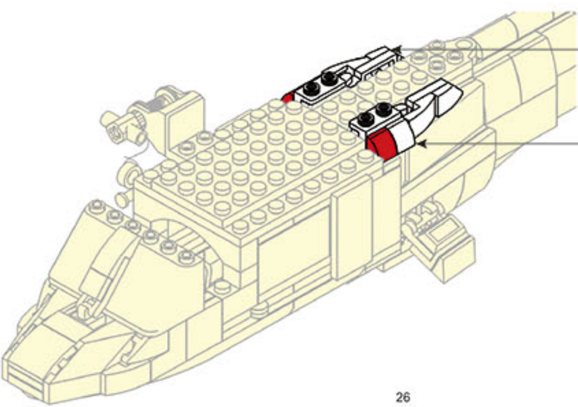

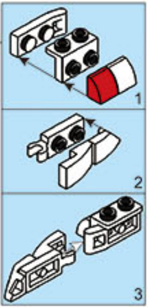

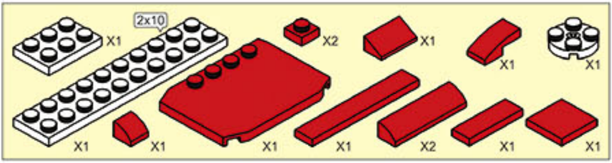
X1
2x10
X2
X1
X1
X1
X1
X1
X1
X1
X2
X1
X1

## 32

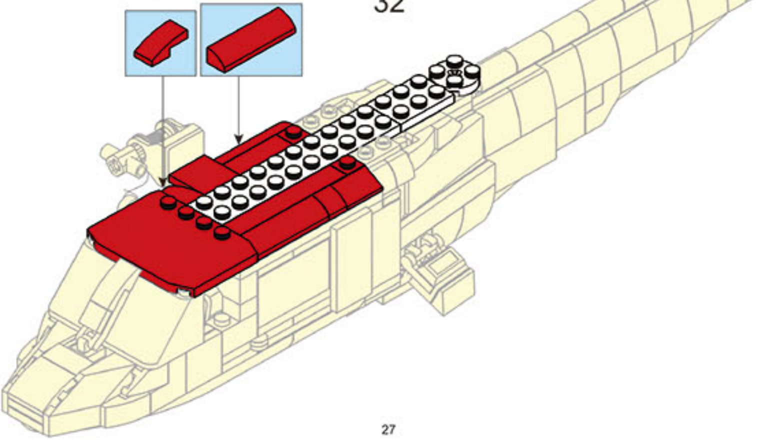

---

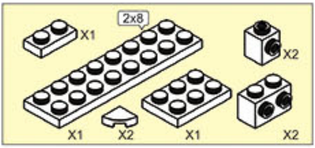
X1
2x8
X2
X1
X2
X1
X2

## 33

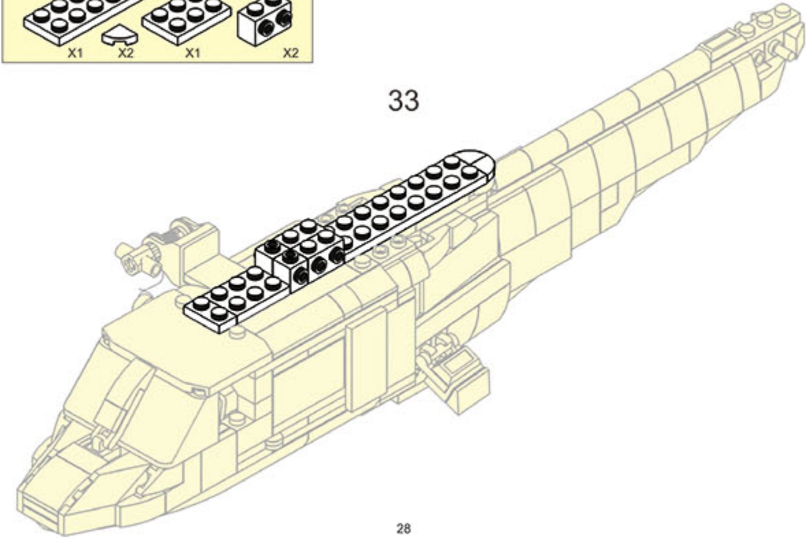

## 34

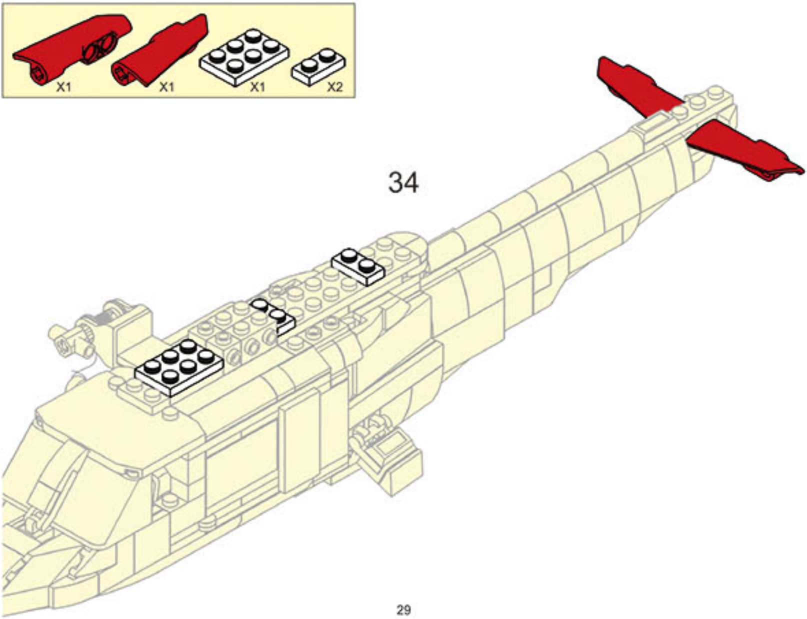

## 35

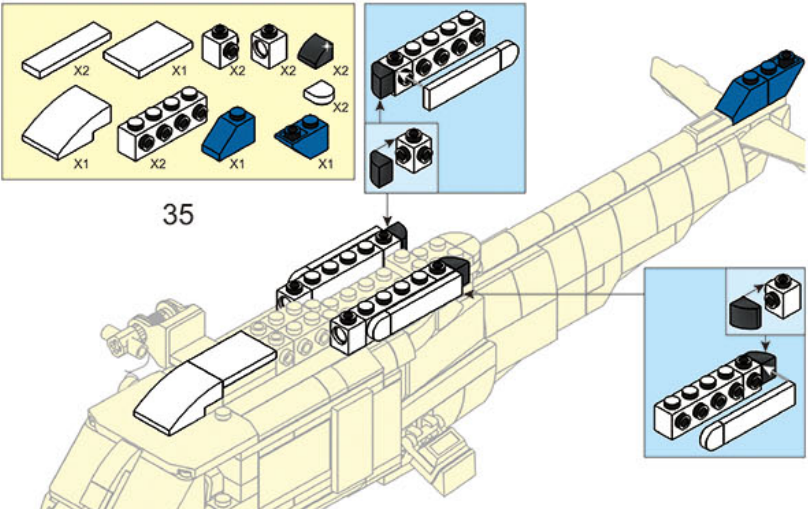
X2
X1
X2
X2
X2
X2
X1
X2
X1
X1

36

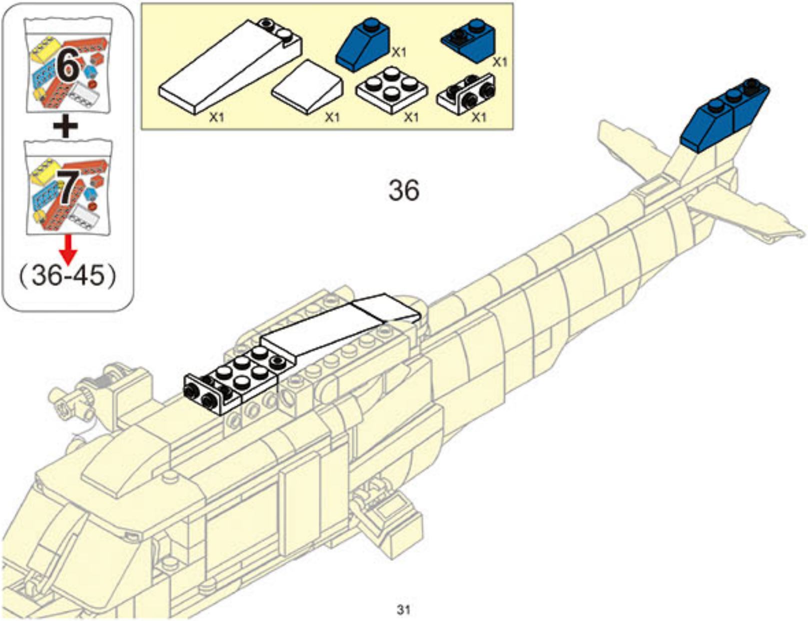
6
+
7
(36-45)
X1
X1
X1
X1
X1
X1

37

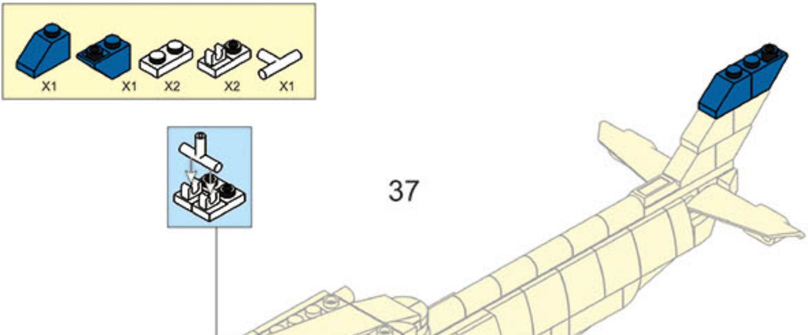
X1
X1
X2
X2
X1

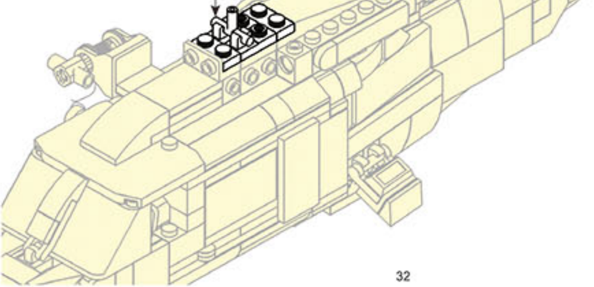

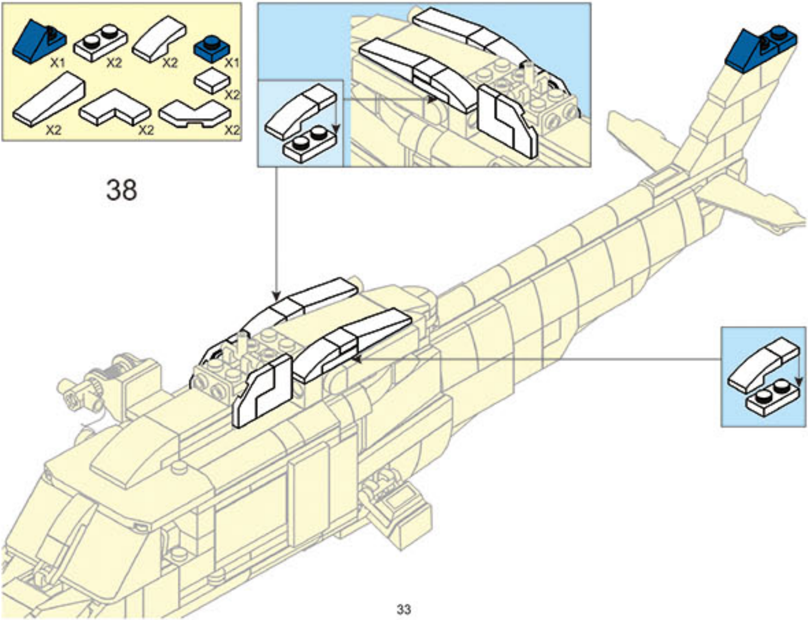
X1
X2
X2
X1
X2
X2
X2
X2

38

## 39

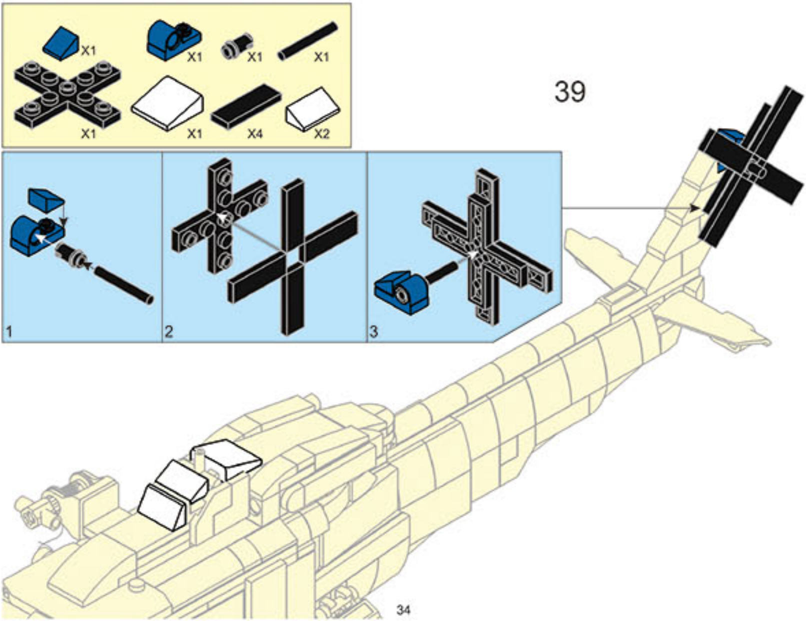
X1
X1
X1
X1
X1
X1
X4
X2
1
2
3

## 40

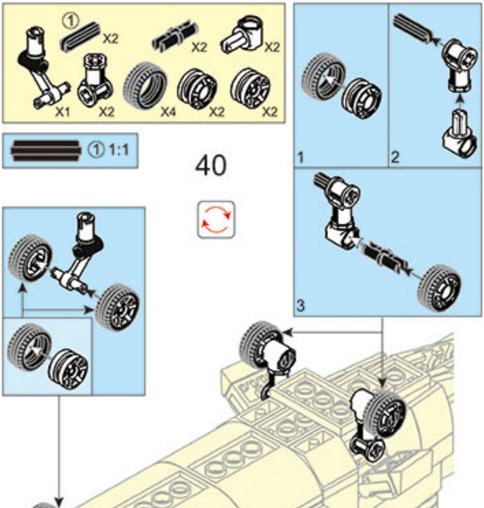
①
X2
X2
X2
X1
X2
X4
X2
X2
① 1:1
1
2
3

## 41

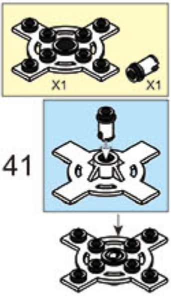

## 42

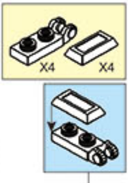

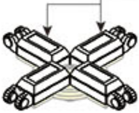

43

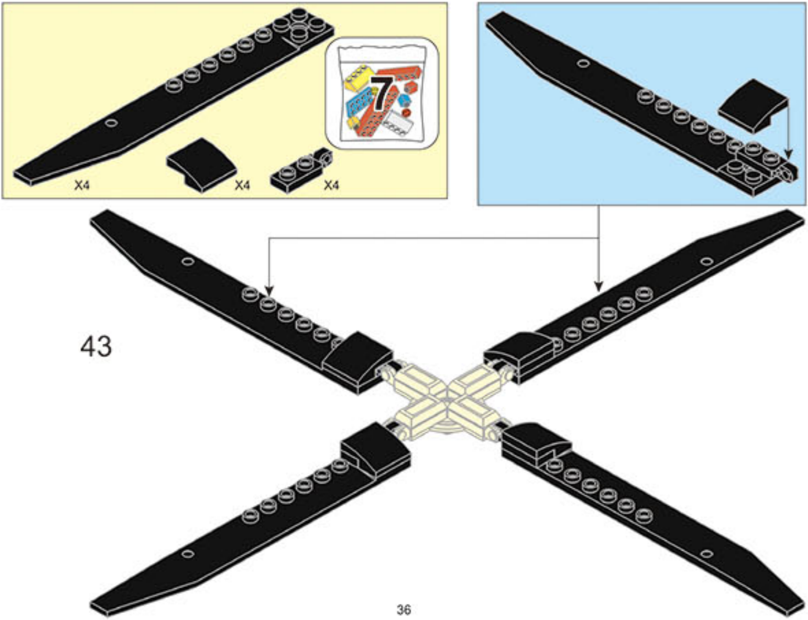

44

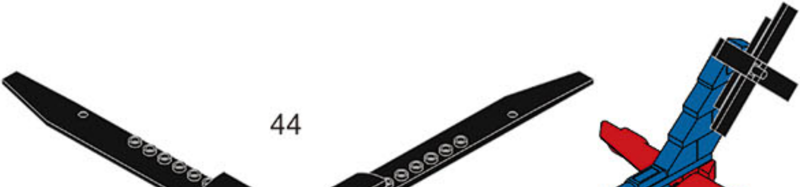

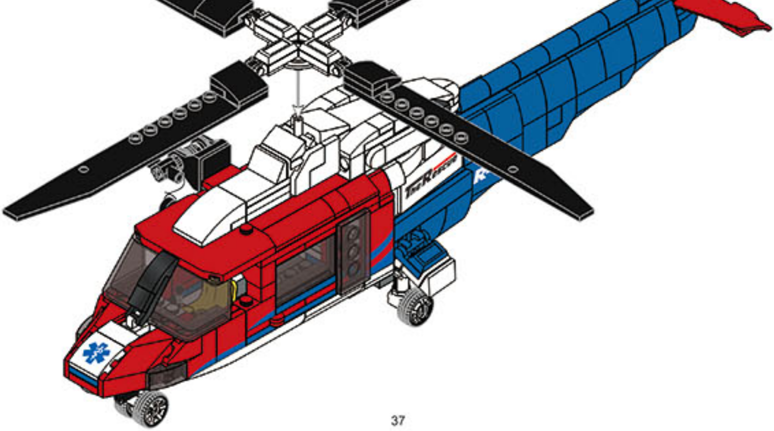
The R rescue
R

45

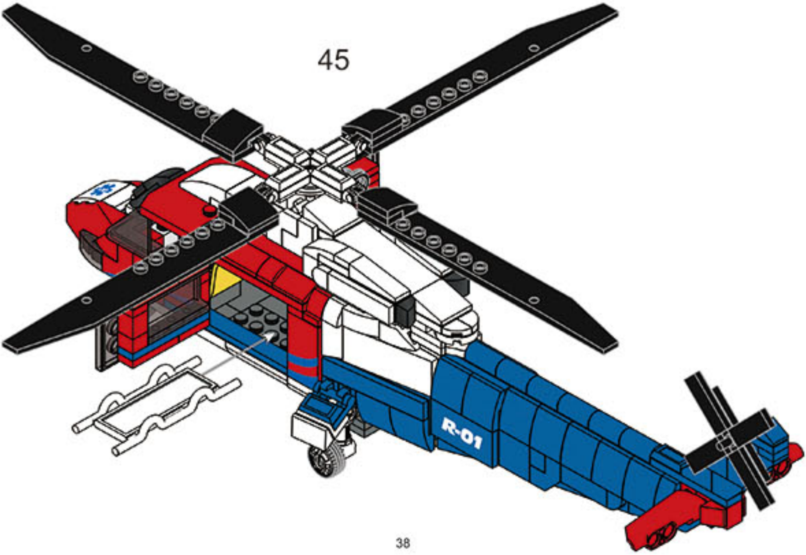

⚠ **WARNING:**
CHOKING HAZARD - Small parts.
Not for children under 3 years.